IBARMIA

Series P

Prismatic-column Multiple Head Drills

Clausing IBARMIA Prismatic-column Multiple Head industrial drilling machines are mounted to extra heavy-duty base. The slotted table offers greater ease in positioning and handling bulky and heavy workpieces.

Multiple Head drilling machines are ideal for work where the workpiece requires more than one operation. Each drill head on a multiple head drill can be equipped differently to perform the operation required by that head such as... (automatic drilling cycle, automatic tapping or any of the equipment offered).

In many cases where production of several pieces are required, the Multiple Head drills are more productive than machining centers at a much lower cost.

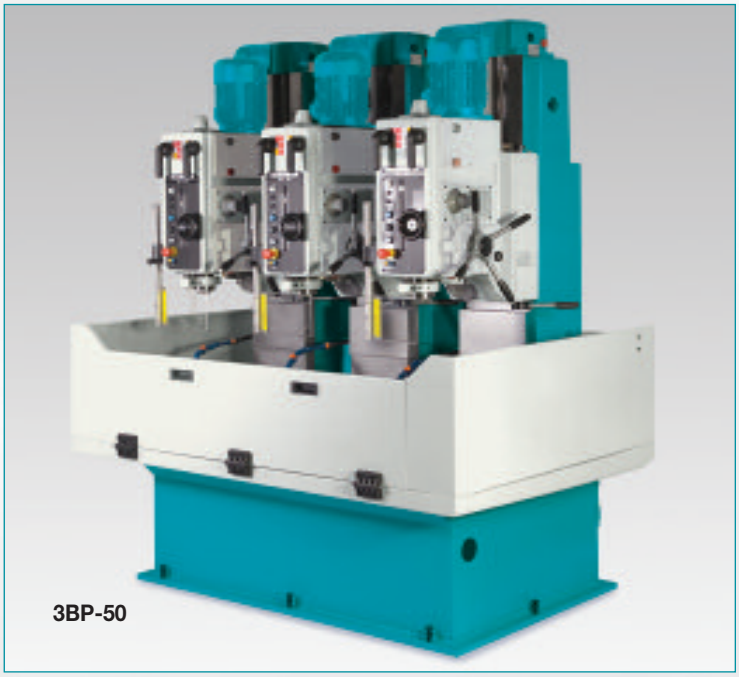

3BP-50

4BP-40

Multiple Spindle Models, Size and Dimensions

Models	Size	A	B	C min.	C max.	D	E	F	G	L	M	N
2 Head Drills												
2BP-40	31.5"(800mm)	86"(2180mm)	50"(1270mm)	7.1"(180mm)	33.1"(840mm)	15.7"(400mm)	96"(2450mm)	15.7"(400mm)	27.6"(700mm)	37.4"(950mm)	49.2"(1250mm)	21.7"(550mm)
2BP-50	37.4"(950mm)	97"(2470mm)	51"(1320mm)	11"(280mm)	39.4"(1000mm)	18.7"(475mm)	108"(2750mm)	15.7"(400mm)	27.6"(700mm)	37.4"(950mm)	49.2"(1250mm)	21.7"(550mm)
2BP-70	41.3"(1050mm)	103"(2820mm)	59"(14900mm)	9.1"(230mm)	43.3"(1100mm)	20.6"(525mm)	120"(3050mm)	19.69"(500mm)	27.6"(700mm)	41.3"(1050mm)	53.1"(1350mm)	23.6"(600mm)
3 Head Drills												
3BP-40	31.5"(800mm)	86"(2180mm)	50"(1270mm)	7.1"(180mm)	33.1"(840mm)	15.7"(400mm)	96"(2450mm)	15.7"(400mm)	27.6"(700mm)	59"(1550mm)	70.9"(1800mm)	21.7"(550mm)
3BP-50	37.4"(950mm)	97"(2470mm)	51"(1320mm)	11"(280mm)	39.4"(1000mm)	18.7"(475mm)	108"(2750mm)	15.7"(400mm)	27.6"(700mm)	59"(1550mm)	70.9"(1800mm)	21.7"(550mm)
3BP-70	41.3"(1050mm)	103"(2820mm)	59"(14900mm)	9.1"(230mm)	43.3"(1100mm)	20.6"(525mm)	120"(3050mm)	19.69"(500mm)	27.6"(700mm)	65"(1650mm)	77"(1950mm)	23.6"(600mm)
4 Head Drills												
4BP-40	31.5"(800mm)	86"(2180mm)	50"(1270mm)	7.1"(180mm)	33.1"(840mm)	15.7"(400mm)	96"(2450mm)	15.7"(400mm)	27.6"(700mm)	81"(2050mm)	92.5"(2350mm)	21.7"(550mm)
4BP-50	37.4"(950mm)	97"(2470mm)	51"(1320mm)	11"(280mm)	39.4"(1000mm)	18.7"(475mm)	108"(2750mm)	15.7"(400mm)	27.6"(700mm)	81"(2050mm)	92.5"(2350mm)	21.7"(550mm)
4BP-70	41.3"(1050mm)	103"(2820mm)	59"(14900mm)	9.1"(230mm)	43.3"(1100mm)	20.6"(525mm)	120"(3050mm)	19.69"(500mm)	27.6"(700mm)	88.5"(2250mm)	100.4"(2550mm)	23.6"(600mm)
5 Head Drills												
5BP-40	31.5"(800mm)	86"(2180mm)	50"(1270mm)	7.1"(180mm)	33.1"(840mm)	15.7"(400mm)	96"(2450mm)	15.7"(400mm)	27.6"(700mm)	102.3"(2600mm)	114"(2900mm)	21.7"(550mm)
5BP-50	37.4"(950mm)	97"(2470mm)	51"(1320mm)	11"(280mm)	39.4"(1000mm)	18.7"(475mm)	108"(2750mm)	15.7"(400mm)	27.6"(700mm)	102.3"(2600mm)	114"(2900mm)	21.7"(550mm)
5BP-70	41.3"(1050mm)	103"(2820mm)	59"(14900mm)	9.1"(230mm)	43.3"(1100mm)	20.6"(525mm)	120"(3050mm)	19.69"(500mm)	27.6"(700mm)	112"(2850mm)	124"(3150mm)	23.6"(600mm)
6 Head Drills												
6BP-40	31.5"(800mm)	86"(2180mm)	50"(1270mm)	7.1"(180mm)	33.1"(840mm)	15.7"(400mm)	96"(2450mm)	15.7"(400mm)	27.6"(700mm)	124"(3150mm)	136"(3450mm)	21.7"(550mm)
6BP-50	37.4"(950mm)	97"(2470mm)	51"(1320mm)	11"(280mm)	39.4"(1000mm)	18.7"(475mm)	108"(2750mm)	15.7"(400mm)	27.6"(700mm)	124"(3150mm)	136"(3450mm)	21.7"(550mm)
6BP-70	41.3"(1050mm)	103"(2820mm)	59"(14900mm)	9.1"(230mm)	43.3"(1100mm)	20.6"(525mm)	120"(3050mm)	19.69"(500mm)	27.6"(700mm)	136"(3450mm)	147.6"(3750mm)	23.6"(600mm)
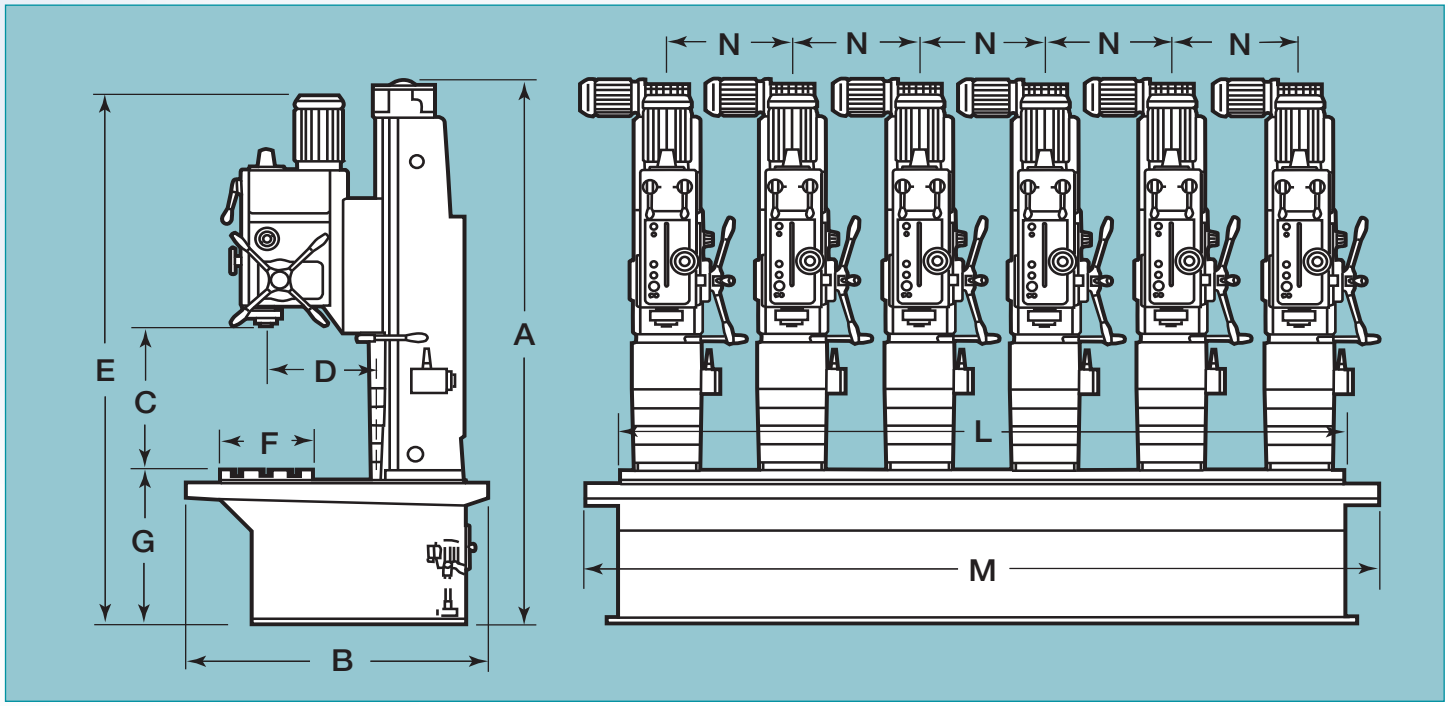
Multiple Spindle Dimensional Drawings